Roof bar kit Connect 14- L1/L2, 2 bars

MODUL-SYSTEM **RR160023000**

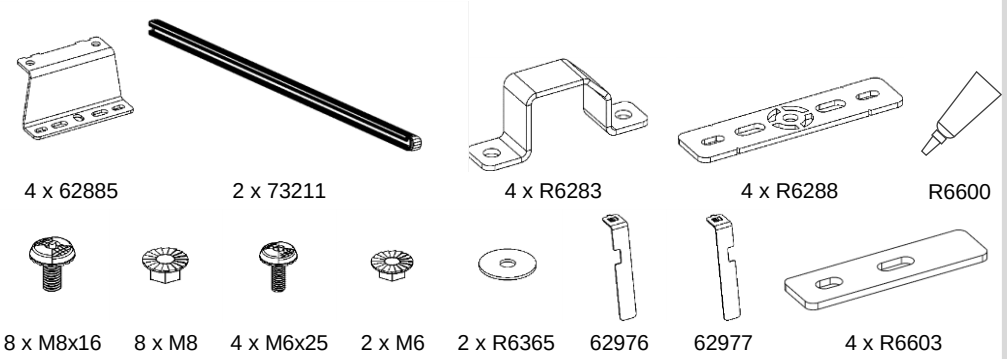

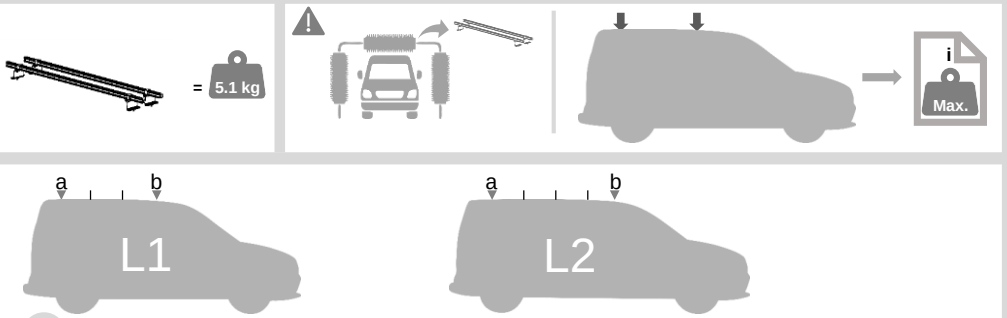

1

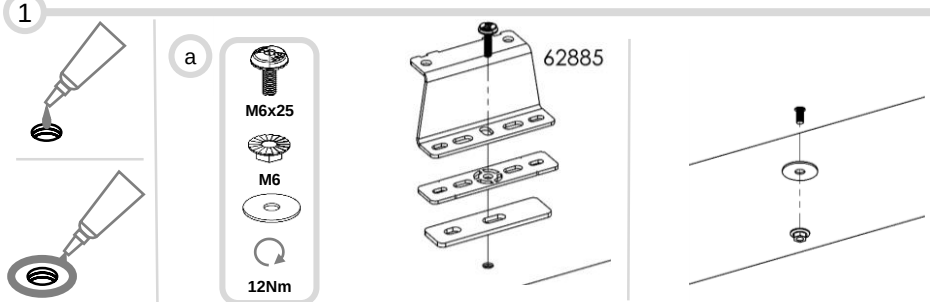

b

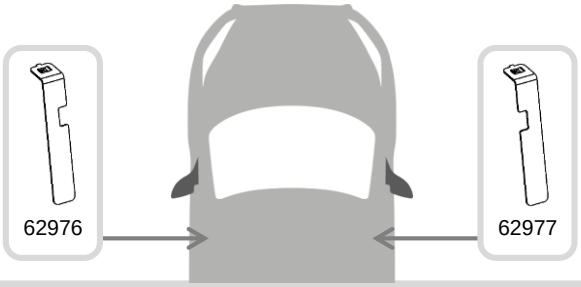

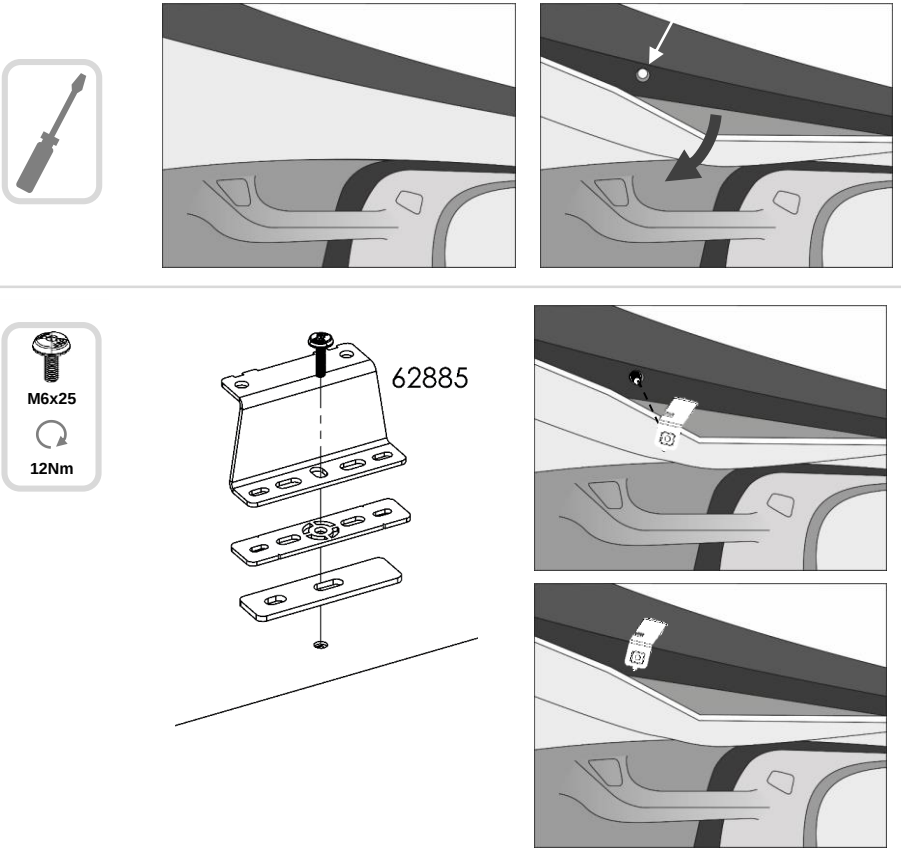
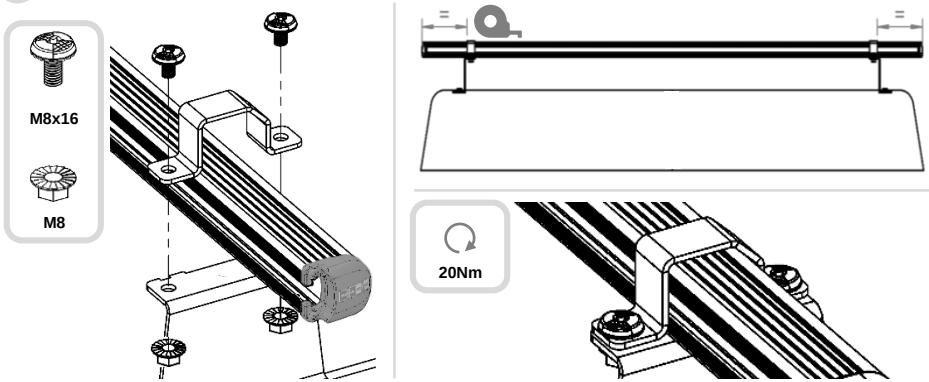
2